Rotary module, pneumatic

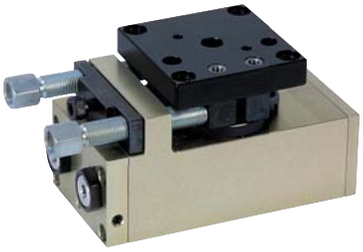

Material:
Housing in high-strength aluminium; stop system steel

Surface finish:
Housing anodized; stop system hardened

Sample order:
nlm 20062-016

Note:
Maintenance-free pneumatic rotary module with dual pressurised drive cylinder. Control by 4/2 or 5/2 directional valve. Drive ensues via compressed air, 4-8 bar, constant, filtered (10 µm), dried, oiled or unoiled. Compressed air connection M5.
Modules of the same size can be combined with one another without adapter plates via the precise centring system by means of centring rings 20240.

The 0° – 190° rotation angle is continuously adjustable.

Repeat accuracy ±0.01°.

Accessory:
Shock absorber. Proximitiy switch. Plug connector.

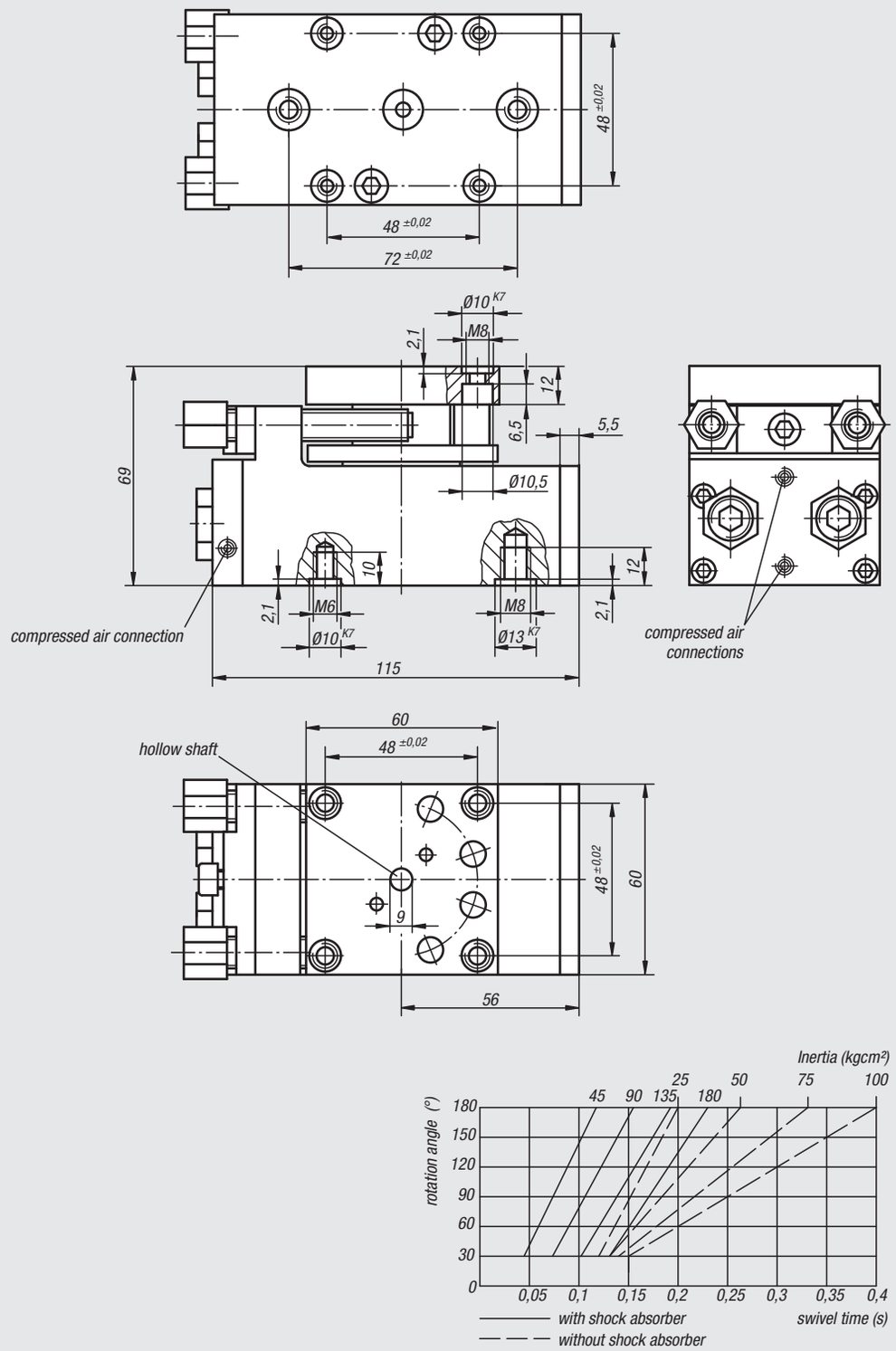

Order No.	Size	Driving torque Nm	Rotation angle	Axial load N	Radial load N	Cylinder-Ø	Air consumption per cycle at 6 bar (ccm)	Approx. weight kg
20062-016	6	3,5	0° - 190°	350	450	2 x 22	45	1,100

Order No.	Size	Suitable shock absorber	Suitable proximitiy switch	Suitable plug connector
20062-016	6	23610-1410012	20915-030	20950-010X2000