Rotary module, pneumatic

heavy duty version

Material:
Housing in high-strength aluminium;
stop system steel

Surface finish:
Housing anodized; stop system hardened

Sample order:
nlm 20064-029

Note:
Maintenance-free pneumatic rotary module with dual pressurised drive cylinder in heavy duty version. Control by 4/2 or 5/2 directional valve. Drive ensues via compressed air, 4-8 bar, constant, filtered (10 µm), dried, oiled or unoiled. Compressed air connection R1/8.
Modules of the same size can be combined with one another without adapter plates via the precise centring system by means of centring rings 20240.

The 0° – 190° rotation angle is continuously adjustable.

Repeat accuracy ±0.01°.

Shock absorbers are included in delivery.

Accessory:
Proximitiy switch. Plug connector.

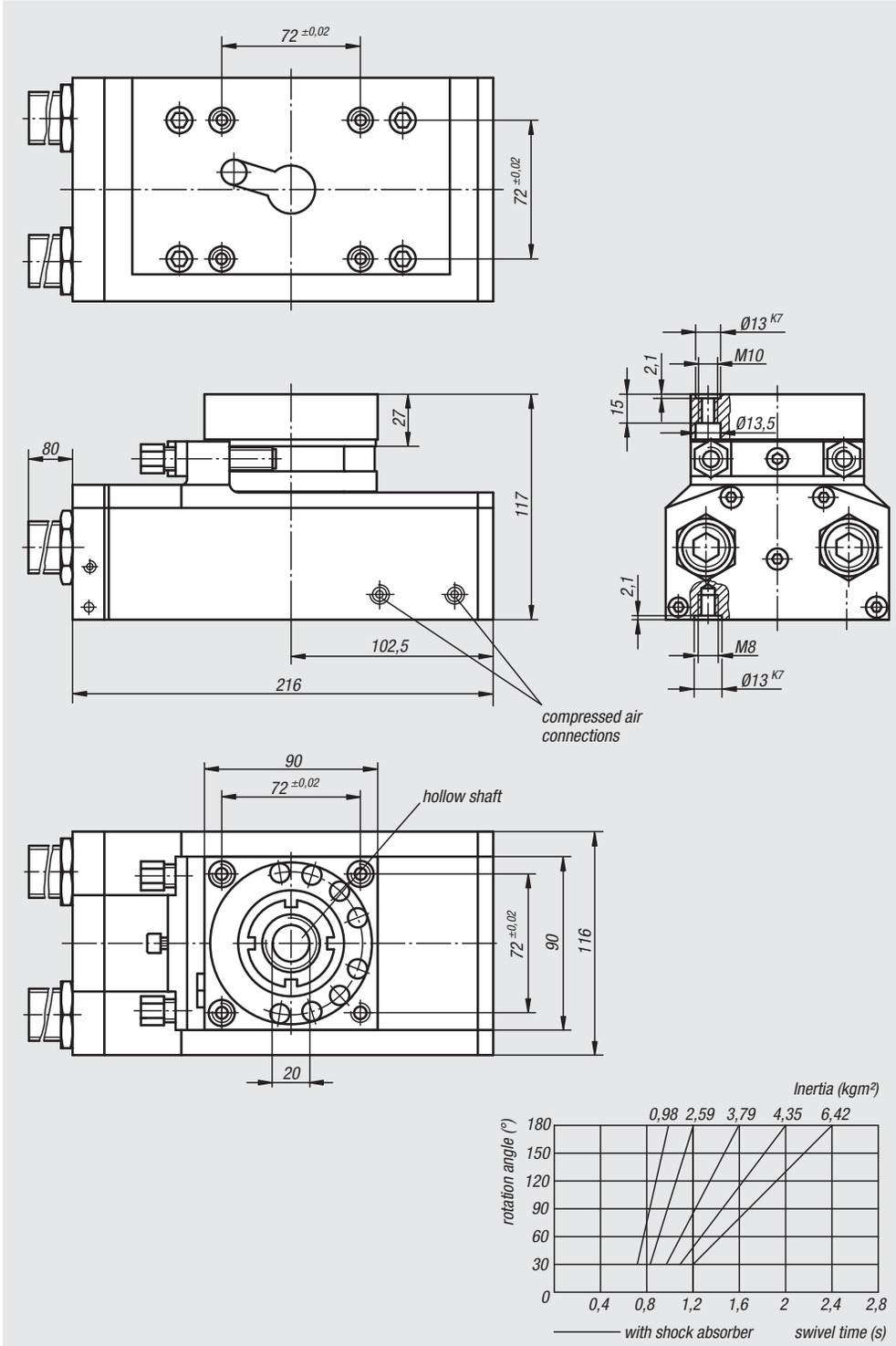

Order No.	Size	Driving torque Nm	Overturning moment max. Nm	Rotation angle	Axial load N	Radial load N	Cylinder-Ø	Air consumption per cycle at 6 bar (ccm)	Approx. weight kg
20064-029	9	24	110	0° - 190°	1800	2400	2 x 38	303	7,000

Order No.	Size	Suitable proximitiy switch	Suitable plug connector
20064-029	9	20915-030	20950-010X2000