Digital position indicators

Material, surface finish:
Housing polyamide 6, impact-resistant.
Hollow shaft in steel, black oxide finish.
Viewing window plastic.
Grub screw steel, black.
Counter dials black, figures white.

Sample order:
nlm 21901-01001111
(Position indicator with 1 mm pitch, decimal point in first position from the right, assembly position 1, direction of count ascending clockwise, colour orange)

Note:
Digital position indicators allow direct reading off of input measurement values at a glance.
In addition, the value indicated per spindle rotation (corresponding spindle pitch) can be selected and the various indicator values can be operated by a transmission gear. The position indicators are distinguished by their small construction with very clear display.
They are especially suitable for small spindle distances and small shaft diameters and they have a torque support that is located in a drillhole on the other side.

** At the 1st asterisk give assembly position and at the 2nd asterisk give the count direction (see sample order „assembly position, count direction“).

On request:
– Stainless steel driveshaft
– Indicator for inch

Accessory:
– Reducing bushes 21940

Technical data:
– Counter consisting of 3 10-position dials
– Height of figures about 4 mm
– Hollow shaft Ø 10 H7 mm
– Temperature resistant to 80 °C
– Oil and solvent resistant

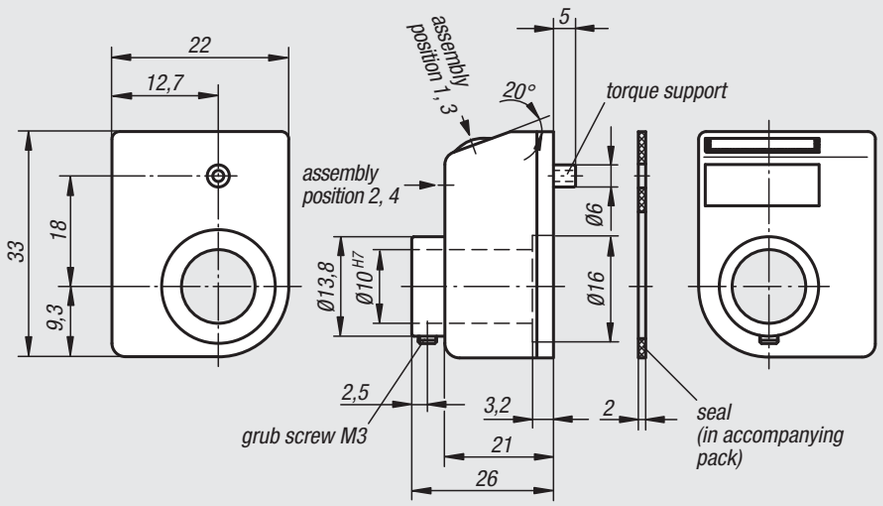

Indicator after one rotation decimal point position:	Assembly position (1 - 4):
010	1 2 3 4
e. g. 21901-**01001**111 **0100** = 1mm pitch **1** = decimal point at the 1st position from the right	e. g. 21901-01001**1**11 **1** = assembly position

Count direction (1 - 2):	Colour (1 - 2):
2 1	1 2
e. g. 21901-01001**1**1 **1** = clockwise (ascending values) **2** = anticlockwise (ascending values)	e. g. 21901-01001**1**1 **1** = orange **2** = black

Order No. orange	Order No. black	Pitch	Indicator after one rotation	Decimal point in position	Revolutions per minute max.	Approx. weight kg
21901-010011**	**21901-01001**2**	1	01,0	1	1500	0,020
21901-020011**	**21901-02001**2**	2	02,0	1	750	0,020
21901-025011**	**21901-02501**2**	2,5	02,5	1	600	0,020
21901-030011**	**21901-03001**2**	3	03,0	1	500	0,020
21901-040011**	**21901-04001**2**	4	04,0	1	375	0,020
21901-050011**	**21901-05001**2**	5	05,0	1	300	0,020
21901-060011**	**21901-06001**2**	6	06,0	1	250	0,020
21901-080011**	**21901-08001**2**	8	08,0	1	180	0,020
21901-100011**	**21901-10001**2**	10	10,0	1	150	0,020