Work Supports

extending hydraulically – contact by spring force, single acting with spring return, max. operating pressure 500 bar

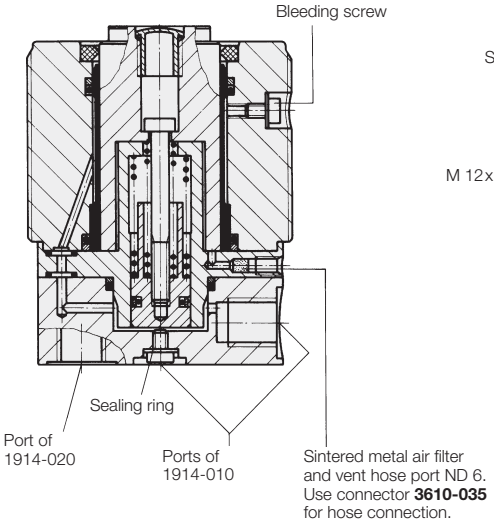

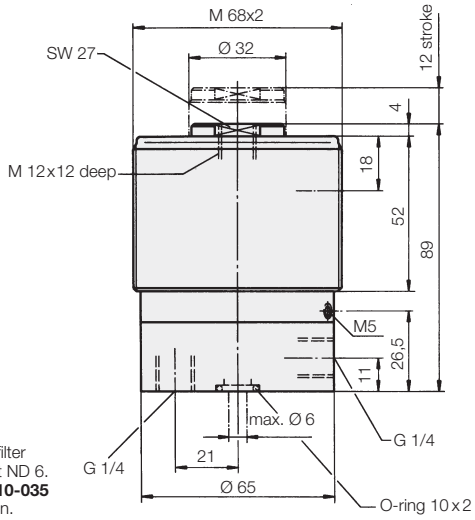

Description

The support plunger is retracted in off-position. When pressurised the support plunger moves against the inserted workpiece by means of light force. With increasing oil pressure, the plunger locks hydraulically. After the system has been unclamped, the support plunger returns to off-position. The support plunger is provided with female thread to enable the use of threaded pieces for height adjustment.

The internal part of the work support is protected against dust and swarf by a sintered metal air filter.

Important notes!

If there is any danger of fluids being sucked into the filter, a vent hose has to be connected.

The support plunger must always be protected against penetration of contamination by a contact bolt or a plug.

The plunger spring contact force with the workpiece is 30-60 N depending on the stroke. This force is functionally required for plunger movement and cannot be used to lift the workpiece nor to actuate linkages.

Work supports are not suitable to compensate side loads.

Operating conditions, tolerances and other data see data sheet A 0.100.

It is absolutely necessary to follow the instructions for venting of the spring area on data sheet A 0.110.

Admissible load F as function of the operating pressure p

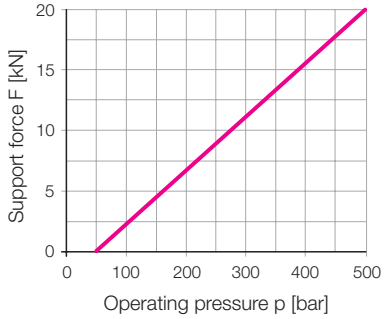

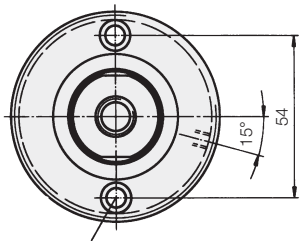

Bore and counterbore Ø 7 / Ø 10,5 x 7 deep for mounting screws M 6 x 85 DIN 912

Plunger Ø	[mm]	32
Plunger stroke	[mm]	12
Oil for full stroke	[cm³]	2.5
Max. oil flow rate	[cm³/s]	35
Recom. minimum oil pressure	[bar]	100
Weight	[kg]	2.0

	Part-no.
Port at the side	**1914-010**
Port at the bottom	**1914-020**
Accessories	
O-ring 10 x 2	**3000-347**
Screw plug G 1/4	**3610-006**
Capstan nut M 68 x 2	**3522-008**
Spare O-ring	**3000-536**
Contact bolt M 12 x 12	**3614-028**

Installation examples 1914-010

Oil supply of version 1914-010 can optionally be effected by lateral pipe connection or from below through drilled channels in the fixture base plate.

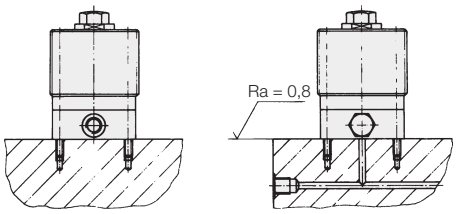

Installation examples 1914-020

Oil supply of version 1914-020 can only be effected by pipe connection at the bottom.

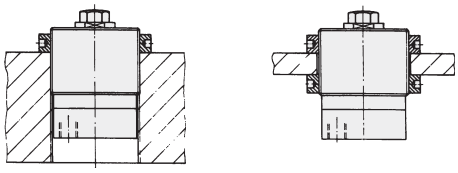

Accessory
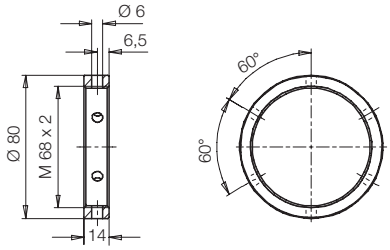
Capstan nut