Spring mounted centre sleeves

with lifting curve

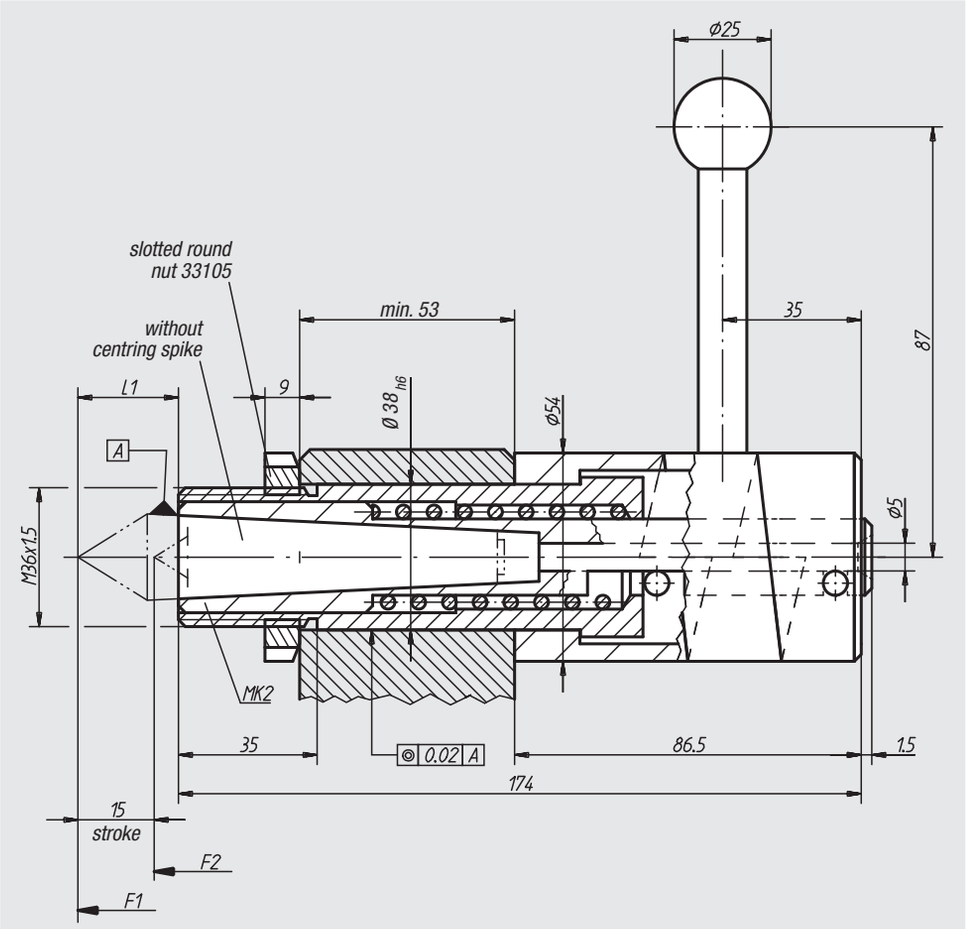

Material:
Steel; ball in black duroplastic PF 31

Surface finish:
Black oxide finish

Sample order:
nlm 33182-02

Note:
The max. course of 15 mm can be reached by rotation of lifting curve by 180°.

Order No.	L1	suitable centering point	Spring force initial pressure F1 approx. N	Final pressure F2 approx. N	Approx. weight kg
33182-02	32	33190-02096	100	137	1,900
	41	33190-02105			
	49	33190-02113			